GEOGRAPHIC INDEX: 540753 617716
T.M.:17.-1-77.2, 17.-1-76.21, 17.-1-76.112, 17.-1-76.111, 17.-1-48, 17.-1-39
On:
Closed by:
Drawn by:LIG
Spell checked by:
Checked by:
W.O. No.:21792, 25231
Layout: NOTES AND DETAILS
Drawing Name: SB21792DS__DETAILS__R19_V17

EROSION & SEDIMENT CONTROL NOTES

1. PRIOR TO THE START OF CONSTRUCTION ACTIVITY, THE TEMPORARY STRUCTURAL SEDIMENT CONTROLS (SILT FENCE, STABILIZED CONSTRUCTION ENTRANCE, ETC.) FOR THE ANTICIPATED WORK MUST BE INSTALLED.
2. THE LIMITS OF LAND DISTURBANCE MUST BE PHYSICALLY MARKED ON-SITE WITH ORANGE CONSTRUCTION FENCE. SILT FENCE MUST BE INSTALLED ON-CONTOUR AND SHALL NOT BE USED TO DELINEATE THE LIMIT OF CONTRACT, OR PROPERTY LINE.
3. MASS CLEARINGS AND GRADING MUST BE AVOIDED. CLEAR AND GRUB ONLY WHAT IS REQUIRED FOR IMMEDIATE CONSTRUCTION ACTIVITY.
4. EXPOSED SOILS ANTICIPATED TO REMAIN IDLE FOR MORE THAN FOURTEEN (14) DAYS SHALL BE IMMEDIATELY STABILIZED WITH TEMPORARY SEED AND MULCH.
5. WHEREVER POSSIBLE, NATURAL VEGETATION IS TO BE PROTECTED BY LIMITING THE CLEARING AND GRUBBING OPERATION, AS WELL AS RESTRICTING CONSTRUCTION EQUIPMENT TO THE WORK AREA.
6. WHERE FEASIBLE, LARGE TREES TO BE PRESERVED SHALL BE FENCED OFF SO THAT THE ROOT SYSTEM AND OVERHANGING BRANCHES ARE PROTECTED FROM CONSTRUCTION EQUIPMENT.
7. OFF-SITE RUNOFF SHOULD BE DIVERTED FROM HIGHLY ERODIBLE SOILS AND STEEP SLOPES TO STABLE AREAS WITH TEMPORARY DIKES AND/OR SWALES.
8. PERMANENT SEEDING SHOULD OPTIMALLY BE UNDERTAKEN IN THE SPRING FROM MARCH THROUGH MAY, AND IN LATE SUMMER AND EARLY FALL FROM SEPTEMBER TO OCTOBER 15. PERMANENT SEEDING MAY BE UNDERTAKEN DURING THE SUMMER, PROVIDING AN ADEQUATE WATERING SCHEDULE IS MAINTAINED.
9. DURING THE PEAK SUMMER MONTHS AND IN THE FALL AFTER OCTOBER 15, WHEN SEEDING IS OTHERWISE FOUND TO BE IMPRACTICABLE, AN APPROPRIATE TEMPORARY MULCH SHALL BE APPLIED. TEMPORARY SEEDING WITH RYE CAN BE UTILIZED THROUGH NOVEMBER.
10. ALL SLOPES STEEPER THAN 3H:1V AS WELL AS PERIMETER DIKES, SEDIMENT BASINS OR TRAPS, AND EMBANKMENTS SHALL, UPON COMPLETION, BE IMMEDIATELY STABILIZED WITH SOD, SEED AND ANCHORED STRAW MULCH, OR OTHER APPROVED STABILIZATION MEASURES (RECP).
11. MAINTENANCE SHALL BE PERFORMED AS NECESSARY TO ENSURE CONTINUED STABILIZATION. AREAS OUTSIDE OF THE PERIMETER SEDIMENT CONTROL SYSTEM SHALL NOT BE DISTURBED.
12. AREAS WHERE PERMANENT VEGETATION IS TO BE ESTABLISHED SHALL BE DRESSED WITH A MINIMUM OF 4 INCHES OF TOPSOIL. COMPACTED SUB-SOILS SHALL BE DISKED OR TILLED PRIOR TO PLACEMENT OF TOPSOIL. SURFACE SHALL BE RAKED SMOOTH, REMOVING STICKS, FOREIGN MATTER, AND STONES OVER 1" IN DIAMETER.
13. TOPSOIL SHALL HAVE AT LEAST 6% BY WEIGHT OF FINE TEXTURED STABLE ORGANIC MATERIAL, AND NO GREATER THAN 20%. IT SHALL HAVE NOT LESS THAN 20% OF MATERIAL PASSING THE NO. 200 SIEVE, AND NOT MORE THAN 15% CLAY. IT SHALL BE RELATIVELY FREE OF STONES OVER 1-1/2" INCHES IN DIAMETER, TRASH, NOXIOUS WEEDS, AND SHALL HAVE LESS THAN 10% GRAVEL.
14. SEEDING FOR TEMPORARY STABILIZATION OR IN PREPARATION OF WINTER SHUTDOWN SHALL BE APPLIED AT THE FOLLOWING RATE AND SCHEDULE: SPRING OR SUMMER OR EARLY FALL, USE RYEGRASS AT 30 LBS PER ACRE. LATE FALL OR EARLY WINTER, USE WINTER RYE AT 100 LBS PER ACRE.
15. PERMANENT SEEDING FOR FINAL STABILIZATION SHOULD BE APPLIED EITHER FROM SPRING-THAW TO MID-MAY OR MID-AUGUST TO EARLY OCTOBER WITH A 65/20/15 MIX OF KENTUCKY BLUEGRASS/PERENNIAL RYEGRASS/FINE FESCUE AT 160 LBS. PER ACRE. IF SEEDING IS DONE BETWEEN MID-MAY AND MID-AUGUST, IRRIGATION MAY BE REQUIRED TO ACHIEVE FINAL STABILIZATION.
16. HAY OR STRAW MULCH SHALL BE APPLIED TO ALL SEEDED AREAS, TEMPORARY OR PERMANENT, AT A RATE OF 2 TONS PER ACRE (OR 3 BALES PER 1,000 SQ FT).
17. WHEN SPECIFIED, ROLLED EROSION CONTROL BLANKET SHALL BE STRAW BIODEGRADABLE DOUBLE-NET BLANKET (EBX-S2 NN) AS MANUFACTURED BY CARTHAGE MILLS, SHALL BE PROVIDED ON ALL FINAL GRADES STEEPER THAN 1 VERTICAL OVER 3 HORIZONTAL (UP TO 2H:1V).
18. WHEN SPECIFIED, INLET PROTECTION SHALL BE INSTALLED CONCURRENTLY WITH CATCH BASIN INSTALLATION. IN THE SAME MANNER, ROCK OUTLET PROTECTION SHALL BE INSTALLED CONCURRENTLY WITH PIPE DISCHARGE INSTALLATION.
19. EROSION AND SEDIMENT CONTROL PRACTICES WITHIN THE ACTIVE WORK AREA SHALL BE INSPECTED DAILY TO ENSURE THAT THEY ARE BEING MAINTAINED IN EFFECTIVE OPERATING CONDITION AT ALL TIMES.
20. IN AREAS WHERE SOIL DISTURBANCE ACTIVITY HAS TEMPORARILY OR PERMANENTLY CLEARED, THE APPLICATION OF SOIL STABILIZATION MEASURES MUST BE INITIATED BY THE END OF THE NEXT BUSINESS DAY AND COMPLETED WITHIN FOURTEEN (14) DAYS FROM THE DATE THE CURRENT SOIL DISTURBANCE ACTIVITY CEASED.
21. DISCHARGES FROM DEWATERING ACTIVITIES, INCLUDING DISCHARGES FROM DEWATERING OF TRENCHES AND EXCAVATIONS, MUST BE MANAGED BY APPROPRIATE CONTROL MEASURES.
22. STABILIZED CONSTRUCTION ENTRANCE(S) SHALL BE MAINTAINED SO AS TO PREVENT THE TRACKING OF SEDIMENT OFF-SITE. SEDIMENT TRACKED ONTO PAVED RIGHTS-OF-WAY SHALL BE SWEPT CLEAN AT THE END OF EACH WORK DAY.
23. SEDIMENT SHALL BE REMOVED FROM SILT FENCE WHEN IT BECOMES 6" DEEP AT THE FABRIC. SILT FENCE SHALL BE REPLACED WHEN FABRIC BECOMES RIPPED OR FRAYED.
24. SEDIMENT SHALL BE REMOVED FROM SEDIMENT TRAPPING DEVICES WHEN ACCOMMODATION REACHES 50% OF DESIGN CAPACITY. STONE SHALL BE CLEANED OR REPLACED WHEN SEDIMENT POOL NO LONGER DRAINS PROPERLY.

GOOD HOUSEKEEPING

1. ALL WASTE MATERIAL WILL BE COLLECTED AND STORED IN A SECURELY LIDDED METAL DUMPSTER SUPPLIED BY A WASTE HANDLER THAT IS A LICENSED SOLID WASTE MANAGEMENT COMPANY. ALL TRASH AND CONSTRUCTION DEBRIS FROM THE SITE SHALL BE DEPOSITED IN THE DUMPSTER(S). THE DUMPSTER SHALL BE EMPTIED ON AN AS-NEEDED BASIS AND THE TRASH WILL BE HAULED TO AN APPROVED LANDFILL. NO CONSTRUCTION MATERIALS WILL BE BURIED ON-SITE. ALL PERSONNEL WILL BE INSTRUCTED REGARDING THE CORRECT PROCEDURE FOR WASTE DISPOSAL.
2. ALL SANITARY WASTE WILL BE COLLECTED FROM THE PORTABLE UNITS A MINIMUM OF TWO TIMES PER WEEK BY A LICENSED SANITARY WASTE MANAGEMENT CONTRACTOR.
3. GOOD HOUSEKEEPING AND SPILL CONTROL PRACTICES WILL BE FOLLOWED DURING CONSTRUCTION TO MINIMIZE STORMWATER CONTAMINATION FROM PETROLEUM PRODUCTS, FERTILIZERS, PAINTS, AND CONCRETE. TO PREVENT STORMWATER CONTAMINATION FROM THE SITE, GOOD HOUSEKEEPING PRACTICES ARE LISTED BELOW:
   - FERTILIZERS WILL BE APPLIED ONLY IN THE MINIMUM AMOUNTS RECOMMENDED BY THE MANUFACTURER, UNLESS SPECIFIED OTHERWISE BY THE ENGINEER AND WILL BE WORKED INTO THE SOIL TO LIMIT EXPOSURE TO STORMWATER.
   - FERTILIZERS WILL BE STORED IN A COVERED SHED AND PARTIALLY USED BAGS WILL BE TRANSFERRED TO A SEALABLE BIN TO AVOID SPILLS.
   - A COVERED DUMPSTER WILL BE USED FOR ALL WASTE MATERIALS.
   - MATERIALS AND EQUIPMENT NECESSARY FOR SPILL CLEAN-UP WILL BE KEPT IN THE TEMPORARY MATERIAL STORAGE TRAILER ON-SITE. EQUIPMENT WILL INCLUDE BUT NOT BE LIMITED TO: BROOMS, DUST PANS, MOPS, RAGS, GLOVES, GOGGLES, FAST ABSORBENT MATERIAL, SAND, SAW DUST, AND PLASTIC AND METAL TRASH CONTAINERS.
   - CONCRETE TRUCKS WILL NOT BE ALLOWED TO WASH OUT OR DISCHARGE SURPLUS CONCRETE OR DRUM WASH WATER ON THE SITE.
   - WHEN TESTING/CLEANING OF WATER SUPPLY LINES, THE DISCHARGE FROM THE TESTED PIPE WILL BE COLLECTED AND CONVEYED TO A COMPLETED STORMWATER COLLECTION SYSTEM.
   - A STABILIZED CONSTRUCTION ENTRANCE WILL BE CONSTRUCTED TO REDUCE VEHICLE TRACKING OF SEDIMENT.
   - DUMP TRUCKS HAULING MATERIAL FROM THE CONSTRUCTION SITE WILL BE COVERED WITH A TARPAULIN.
   - ALL RUTS CAUSED BY EQUIPMENT USED FOR SITE CLEARING AND GRADING WILL BE ELIMINATED BY RE-GRADING.
4. VEHICLE MAINTENANCE – ALL ON-SITE VEHICLES WILL BE MONITORED FOR LEAKS AND RECEIVE REGULAR PREVENTATIVE MAINTENANCE TO REDUCE THE CHANCE OF LEAKAGE. ANY VEHICLE LEAKING FUEL OR HYDRAULIC FUEL WILL BE IMMEDIATELY SCHEDULED FOR REPAIRS AND USE WILL BE DISCONTINUED UNTIL REPAIRS ARE MADE.
5. SPILL PREVENTION AND RESPONSE – THE FOLLOWING CONTROLS AND PROCEDURES SHALL BE USED TO MINIMIZE THE POTENTIAL FOR LEAKS, SPILLS AND OTHER RELEASES:
   - PERSONNEL WILL BE MADE AWARE OF EMERGENCY TELEPHONE NUMBERS.
   - THE OWNER/OPERATOR AND OR CONTRACTOR SHALL IMMEDIATELY CONTACT NYSDEC IN THE EVENT OF A SPILL, AND SHALL TAKE ALL APPROPRIATE STEPS TO CONTAIN THE SPILL, INCLUDING CONSTRUCTION OF A DIKE AROUND THE SPILL AND PLACING ABSORBENT MATERIAL OVER THIS SPILL.
   - THE OWNER/OPERATOR AND OR CONTRACTOR SHALL INSTRUCT PERSONNEL THAT SPILLAGE OF FUELS, OILS, AND SIMILAR CHEMICALS MUST BE AVOIDED.
   - OILS AND CHEMICALS WILL BE STORED IN APPROPRIATE AND TIGHTLY CAPPED CONTAINERS. CONTAINERS SHALL NOT BE DISPOSED OF ON THE PROJECT SITE.
   - OILS, CHEMICALS, MATERIAL, EQUIPMENT, AND SANITARY FACILITIES WILL BE STORED/LOCATED AWAY FROM TREES AND AT LEAST 100 FEET FROM STREAMS, WELLS, WET AREAS, AND OTHER ENVIRONMENTALLY SENSITIVE SITES.
   - DISPOSE OF CHEMICAL CONTAINERS AND SURPLUS CHEMICALS OFF THE PROJECT SITE IN ACCORDANCE WITH LABEL DIRECTIONS AND LEGAL REQUIREMENTS.
   - USE TIGHT CONNECTIONS AND HOSES WITH APPROPRIATE NOZZLES IN ALL OPERATIONS INVOLVING FUELS.
   - USE FUNNELS WHEN POURING FUELS, LUBRICATING MATERIALS OR CHEMICALS.
   - REFUELING OF CONSTRUCTION EQUIPMENT WILL TAKE PLACE IN PARKING AREAS TO PROVIDE RAPID RESPONSE TO EMERGENCY SITUATIONS.
   - PETROLEUM SPILLS AND MOST HAZARDOUS MATERIALS SPILLS MUST BE REPORTED TO THE NYS DEC HOTLINE (1-800-457-7362), UNLESS THEY MEET ALL OF THE FOLLOWING CRITERIA:
     THE SPILL IS KNOWN TO BE LESS THAN 5 GALLONS; AND
     THE SPILL IS CONTAINED AND UNDER THE CONTROL OF THE SPILLER; AND
     THE SPILL HAS NOT AND WILL NOT REACH THE STATE'S WATER OR ANY LAND; AND
     THE SPILL IS CLEANED UP WITHIN 2 HOURS OF DISCOVERY.
   - SPILLS SHALL ALSO BE REPORTED TO THE LOCAL AUTHORITIES, IF REQUIRED. FOR SPILLS NOT DEEMED REPORTABLE, THE FACTS CONCERNING THE INCIDENT SHALL BE DOCUMENTED BY THE SPILLER, AND A RECORD MAINTAINED FOR ONE YEAR.

COVERAGE UNDER THE GENERAL STORMWATER PERMIT

1. BASED ON THE PROPOSED AREA OF SOIL DISTURBANCE SHOWN HEREON, THIS PROJECT REQUIRES COVERAGE UNDER THE NEW YORK STATE DEPARTMENT OF ENVIRONMENTAL CONSERVATION'S S.P.D.E.S. GENERAL PERMIT FOR STORMWATER DISCHARGES FROM CONSTRUCTION ACTIVITY (PERMIT NO. GP-0-15-002).
2. A NOTICE OF INTENT (NOI) MUST BE FILED WITH THE NYSDEC AT THE ADDRESS ON THE NOI FORM TEN (10) BUSINESS DAYS BEFORE CONSTRUCTION ACTIVITIES TAKE PLACE, WHICH INCLUDES ANY CLEARING, GRADING, EXCAVATION, FILLING, DEMOLITION OR STOCKPILING ACTIVITIES THAT RESULT IN SOIL DISTURBANCE.
3. THIS PLAN, OR SET OF PLANS, SHALL CONSTITUTE AS THE STORMWATER POLLUTION PREVENTION PLAN (SWPPP), AND HAS BEEN PREPARED IN ACCORDANCE WITH ALL APPLICABLE REQUIREMENTS OF THE PERMIT. IN THE CASE OF PROJECTS WHICH REQUIRE POST-CONSTRUCTION STORMWATER MANAGEMENT PRACTICES (STORMWATER MITIGATION), THIS PLAN OR SET OF PLANS, MAY BE ACCOMPANIED BY A REPORT AND/OR OTHER DOCUMENTATION.
4. THE OWNER MUST HAVE THE SWPPP REVIEWED AND APPROVED BY THE REGULATED TRADITIONAL LAND USE CONTROL MS4 (TOWN), PRIOR TO SUBMITTING THE NOI TO THE NYSDEC.
5. THE OWNER SHALL ALSO HAVE THE TOWN SIGN THE "MS4 ACCEPTANCE FORM", WHICH IS SUBMITTED WITH THE NOI.
6. THE OWNER SHALL MAINTAIN A COPY OF THE PERMIT, NOI, NOI ACKNOWLEDGMENT LETTER, SWPPP, MS4 ACCEPTANCE FORM, INSPECTION REPORTS, AND ALL DOCUMENTATION NECESSARY TO DEMONSTRATE ELIGIBILITY WITH THE PERMIT AT THE CONSTRUCTION SITE UNTIL ALL DISTURBED AREAS HAVE ACHIEVED FINAL STABILIZATION AND THE NOTICE OF TERMINATION (NOT) HAS BEEN SUBMITTED TO THE NYSDEC. THE DOCUMENTS MUST BE MAINTAINED IN A SECURE LOCATION ON-SITE, AND MUST BE ACCESSIBLE DURING NORMAL BUSINESS HOURS TO AN INDIVIDUAL PERFORMING A COMPLIANCE INSPECTION.
7. THE NOT CANNOT BE SUBMITTED UNTIL THE SITE HAS ACHIEVED FINAL STABILIZATION. FINAL STABILIZATION MEANS THAT ALL SOIL DISTURBANCE ACTIVITIES HAVE CEASED AND A UNIFORM PERENNIAL VEGETATIVE COVER WITH A DENSITY OF EIGHTY (80) PERCENT OVER THE ENTIRE PERVIOUS SURFACE HAS BEEN ESTABLISHED; OR OTHER EQUIVALENT STABILIZATION MEASURES, SUCH AS PERMANENT LANDSCAPE MULCHES, ROCK RIP-RAP OR WASHED CRUSHED STONE HAVE BEEN APPLIED ON ALL DISTURBED AREAS THAT ARE NOT COVERED BY PERMANENT STRUCTURES, CONCRETE OR PAVEMENT.
8. PRIOR TO THE COMMENCEMENT OF CONSTRUCTION ACTIVITY THE OWNER MUST IDENTIFY THE CONTRACTOR(S) AND/OR SUBCONTRACTOR(S) THAT WILL BE RESPONSIBLE FOR INSTALLING, CONSTRUCTING, REPAIRING, REPLACING, INSPECTING AND MAINTAINING THE EROSION AND SEDIMENT CONTROL PRACTICES INCLUDED IN THE SWPPP, AND IN THE CASE OF PROJECTS WHICH REQUIRE STORMWATER MITIGATION, THE CONTRACTOR(S) AND/OR SUBCONTRACTOR(S) THAT WILL BE RESPONSIBLE FOR CONSTRUCTION OF THE POST-CONSTRUCTION STORMWATER MANAGEMENT PRACTICES. EACH CONTRACTOR SHALL BE KNOWN AS THE TRAINED CONTRACTOR.
9. THE TRAINED CONTRACTOR(S) MUST SIGN A CERTIFICATION STATEMENT(S) FOR THE STATE, AND IN MOST CASES THE TOWN OR VILLAGE, MUST HAVE A CURRENT 4-HOUR NYSDEC ENDORSED TRAINING COURSE, AND MUST BE ON-SITE ANY TIME THERE IS SOIL DISTURBING ACTIVITIES TAKING PLACE.
10. THE OWNER MUST ENSURE THAT ALL EROSION AND SEDIMENT CONTROL PRACTICES, AND IN THE CASE OF PROJECTS WHICH REQUIRE STORMWATER MITIGATION, THE POST-CONSTRUCTION STORMWATER MANAGEMENT PRACTICES, ARE INSPECTED AND MAINTAINED IN ACCORDANCE WITH THE PERMIT.
11. THE OWNER SHALL HAVE THE TRAINED CONTRACTOR INSPECT THE EROSION AND SEDIMENT CONTROLS, AND IN THE CASE OF PROJECTS WITH STORMWATER MITIGATION, THE POST-CONSTRUCTION STORMWATER MANAGEMENT PRACTICES, WITHIN THE ACTIVE WORK AREA DAILY TO ENSURE THAT THEY ARE BEING MAINTAINED IN EFFECTIVE OPERATING CONDITIONS AT ALL TIMES.
12. THE SCOPE OF THE PROJECT MAY ALSO REQUIRE THE OWNER TO HAVE A QUALIFIED INSPECTOR CONDUCT SITE INSPECTIONS AT LEAST ONCE EVERY SEVEN (7) CALENDAR DAYS. GENERALLY, THE QUALIFIED INSPECTOR IS THE PREPARER OF THE SWPPP.
13. ONCE THE SITE HAS ACHIEVED FINAL STABILIZATION, AND IN THE CASE OF PROJECTS THAT REQUIRE STORMWATER MITIGATION, ALL POST-CONSTRUCTION STORMWATER MANAGEMENT PRACTICES HAVE BEEN CONSTRUCTED, COVERAGE UNDER THE PERMIT MUST BE TERMINATED.
14. IF PART OF THE SWPPP, THE OWNER MUST IDENTIFY THE ENTITY, AND HAVE A MECHANISM IN-PLACE FOR LONG-TERM OPERATION AND MAINTENANCE OF THE POST-CONSTRUCTION STORMWATER MANAGEMENT PRACTICE(S).
15. THESE NOTES ARE NOT COMPREHENSIVE OF THE REQUIREMENTS OF THE SUBJECT PERMIT.

PHILIPSTOWN STANDARD PLAN NOTATIONS

1. ALL PROPOSED UTILITIES SHALL BE PLACED UNDERGROUND.
2. ALL EXISTING TREES TO BE SAVED SHALL BE FLAGGED AND SNOW FENCE IS TO BE ERECTED AROUND TREES PRIOR TO ANY CONSTRUCTION ACTIVITIES.
3. PRIOR TO THE INITIATION OF CONSTRUCTION THE APPLICANT OR HIS REPRESENTATIVE WILL MEET WITH THE TOWN ENGINEER, HIGHWAY SUPERINTENDENT, BUILDING INSPECTOR, SITE CONTRACTOR, AND/OR ANY ADDITIONAL OUTSIDE AGENCIES THAT MAY HAVE JURISDICTION FOR A PRE-CONSTRUCTION CONFERENCE TO REVIEW ALL FACETS OF CONSTRUCTION AND REQUIRED INSPECTIONS.
4. ALL EROSION CONTROLS ARE TO BE SET IN PLACE PRIOR TO ANY LAND DISTURBANCES ON THE SITE.
5. DURING THE COURSE OF CONSTRUCTION, WHEREVER THE TOWN HIGHWAY SUPERINTENDENT AND/OR TOWN ENGINEER DETERMINE THAT ADDITIONAL DRAINAGE FACILITIES ARE REQUIRED TO PROVIDE POSITIVE DRAINAGE WITHIN THE RIGHT-OF-WAY OR ADJACENT PROPERTY, THEY SHALL BE INSTALLED BY THE DEVELOPER AT NO COST TO THE TOWN.
6. PER NEW YORK STATE LAW, THE CONTRACTOR SHALL CALL THE UNDERGROUND FACILITIES PROTECTIVE ORGANIZATION (UFPO) AT 1-800-962-7962 TWO (2) FULL DAYS PRIOR TO PERFORMING ANY EXCAVATION WORK.
7. ALL EMBANKMENTS ARE TO BE GRADED AND SEEDED IMMEDIATELY UPON BEING LAID BACK.
8. STABILIZED CONSTRUCTION ENTRANCES SHALL BE PROVIDED AT ALL DRIVEWAY ENTRANCES AND SHALL CONFORM TO NEW YORK STATE GUIDELINES FOR URBAN EROSION AND SEDIMENT CONTROL.
9. STONE WALLS SHALL BE PRESERVED WHEREVER POSSIBLE.
10. NO MECHANICAL EQUIPMENT SHALL BE MOUNTED ON THE ROOF IF VISIBLE FROM THE STREET.
11. ALL WALL MOUNTED LIGHTING FIXTURES SHALL BE SHIELDED OR DIRECTED DOWNWARD TO PREVENT LIGHT SOURCE FROM BEING VISIBLE FROM ADJACENT AREAS.
12. ALL AREAS SHOWN BY LIMITS OF DISTURBANCE SHALL BE FLAGGED AND SUITABLE BARRIERS ERECTED PRIOR TO ANY CONSTRUCTION ACTIVITIES.
13. TRAILERS SHALL NOT BE PERMITTED AS OUTDOOR STORAGE AREAS. ANY TRAILER WHICH HAS REMAINED SUBSTANTIALLY ON THE SITE FOR A PERIOD OF THIRTY DAYS SHALL BE CONSIDERED OUTDOOR STORAGE.
14. PRIOR TO COMMENCEMENT OF ANY CLEARING, GRADING, OR EXCAVATION IN CONNECTION WITH THE PROPOSED CONSTRUCTION ACTIVITY, THE OWNER OF RECORD SHALL FILE A "NOTICE OF INTENT" WITH THE NYS DEC AND THE TOWN OF PHILIPSTOWN. WHEN ALL CONSTRUCTION HAS BEEN COMPLETED AND THE SITE HAS REACHED FINAL STABILIZATION THE OWNER SHALL SUBMIT A "NOTICE OF TERMINATION" TO THE NYS DEC AND THE TOWN OF PHILIPSTOWN.
15. NO SUBSTITUTIONS, ALTERATIONS, DEVIATIONS OR OTHER CHANGES TO ANY OF THE IMPROVEMENTS SHOWN ON THE APPROVED SITE PLAN SHALL BE MADE DURING CONSTRUCTION, OR SHALL BE ACCEPTED BY THE TOWN OF PHILIPSTOWN UNLESS PRIOR APPROVAL IN WRITING HAS BEEN RECEIVED BY THE PROJECT OWNER OR HIS ASSIGNED REPRESENTATIVE.
16. PRIOR TO THE ISSUANCE OF A CERTIFICATE OF OCCUPANCY THE PROJECT OWNER SHALL DELIVER TO THE PLANNING DEPARTMENT AN AS-BUILT SURVEY SHOWING THE LOCATION OF ANY BUILDINGS, AND THE LOCATION AND ELEVATION OF ALL STORMWATER MANAGEMENT FACILITIES INCLUDING OUTLET CONTROL STRUCTURES, WEIR WALLS, OUTFALL PIPES AND OVERFLOW SPILLWAYS.

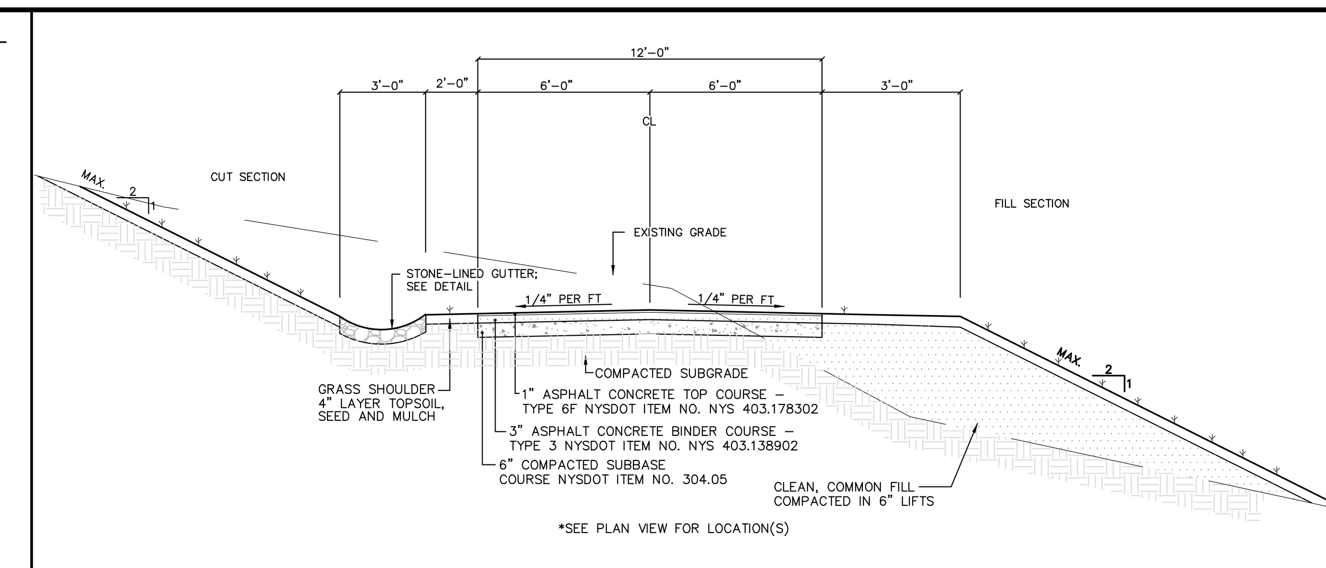

PV-032 TYPICAL DRIVEWAY DETAIL
NOT TO SCALE

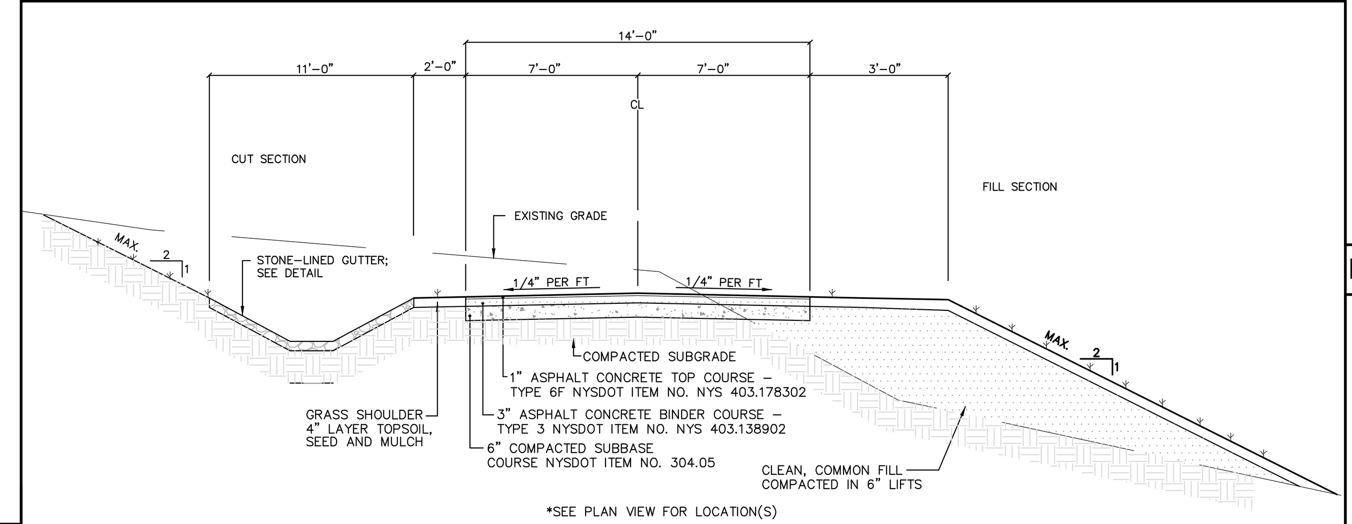

PV-032 TYPICAL COMMON DRIVEWAY DETAIL
NOT TO SCALE

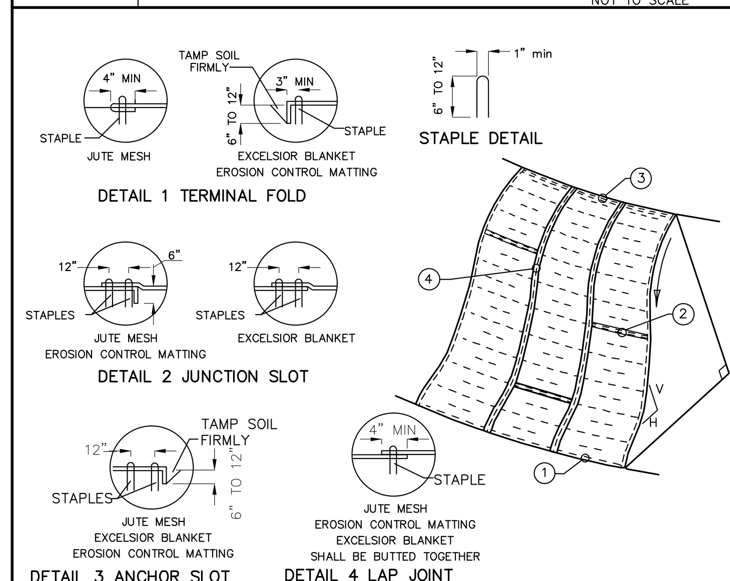

CONSTRUCTION SPECIFICATIONS

1. APPLY TO SLOPES GREATER THAN 3H:IV OR WHERE NECESSARY TO AID IN ESTABLISHING VEGETATION.
2. APPLY FERTILIZER, LIME AND SEED PRIOR TO PLACING MATTING.
3. STAPLES ARE TO BE PLACED ALTERNATELY, IN COLUMNS APPROXIMATELY 2' APART AND IN ROWS APPROXIMATELY 3' APART. APPROXIMATELY 175 STAPLES ARE REQUIRED PER 4'X225' ROLL OF MATERIAL AND 125 STAPLES ARE REQUIRED PER 4'X150' ROLL OF MATERIAL.
4. DISTURBED AREAS SHALL BE SMOOTHLY GRADED. EROSION CONTROL MATERIAL SHALL BE PLACED LOOSELY OVER GROUND SURFACE. DO NOT STRETCH.
5. ALL TERMINAL ENDS AND TRANSVERSE LAPS SHALL BE STAPLED AT APPROXIMATELY 12" INTERVALS.

ROLLED EROSION CONTROL
NOT TO SCALE

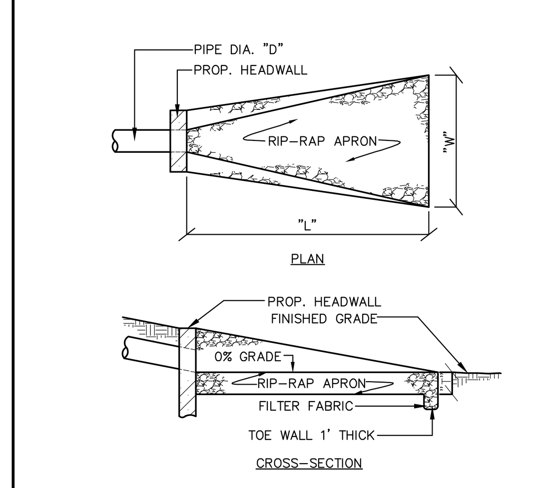

RIP-RAP SCHEDULE					
HW NO.	"D"	"L"	"W"	"T"	MEDIAN STONE SIZE
1	4"	6'	7'	9"	4" STONE
	12"	9'	10'	14"	6" STONE

NOTE: FILTER FABRIC SHALL BE A MEDIUM WEIGHT NON-WOVEN

VELOCITY DISSIPATER DETAIL
NOT TO SCALE

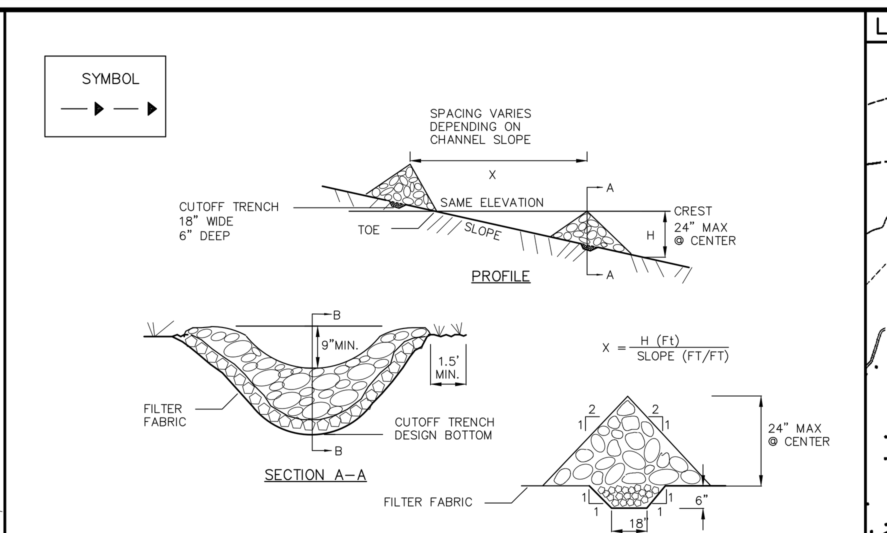

CONSTRUCTION SPECIFICATIONS

1. STONE WILL BE PLACED ON A FILTER FABRIC FOUNDATION TO THE LINES, GRADES AND LOCATIONS SHOWN IN THE PLAN.
2. SET SPACING OF CHECK DAMS TO ASSUME THAT THE ELEVATIONS OF THE CREST OF THE DOWNSTREAM DAM IS AT THE SAME ELEVATION OF THE TOE OF THE UPSTREAM DAM.
3. EXTEND THE STONE A MINIMUM OF 1.5 FEET BEYOND THE DITCH BANKS TO PREVENT CUTTING AROUND THE DAM.
4. PROTECT THE CHANNEL DOWNSTREAM OF THE LOWEST CHECK DAM FROM SCOUR AND EROSION WITH STONE OR LINER AS APPROPRIATE.
5. ENSURE THAT CHANNEL APPURTENANCES SUCH AS CULVERT ENTRANCES BELOW CHECK DAMS ARE NOT SUBJECT TO DAMAGE OR BLOCKAGE FROM DISPLACED STONE.

MAXIMUM DRAINAGE AREA 2 ACRES.

PV-029 CHECK DAM
NOT TO SCALE

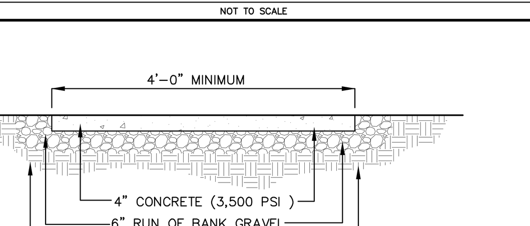

SPECIFICATIONS
CONC. MINIMUM STRENGTH – 3,500 PSI AT 28 DAYS
AIR ENTRAINMENT – LESS THAN 4", PROPERLY SCREENED AND FINISHED TRUE TO GRADE WITH A FLOAT AND SHALL BE CURED

PV-029 CONCRETE SIDWALK DETAIL
NOT TO SCALE

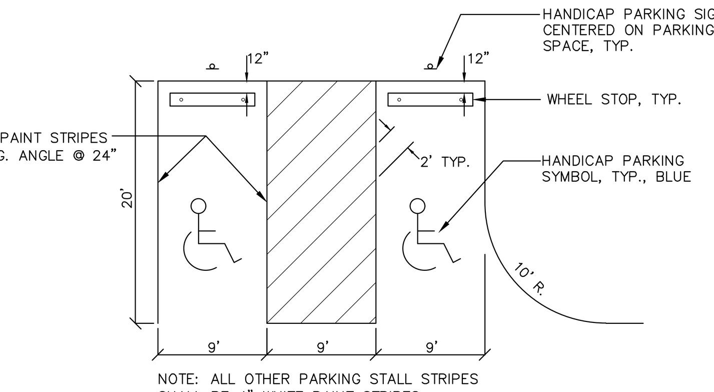

NOTE: ALL OTHER PARKING STALL STRIPES SHALL BE 4" WHITE PAINT STRIPES

PA-001 HANDICAP PARKING STRIPING DETAIL
NOT TO SCALE

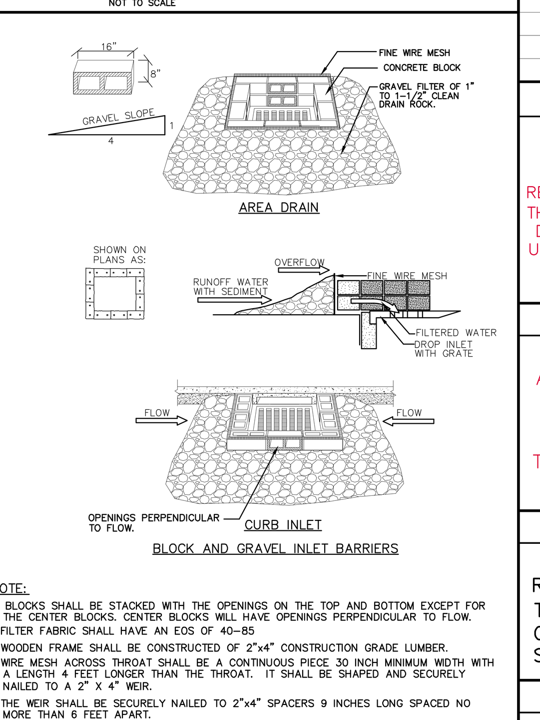

NOTE:
1. BLOCKS SHALL BE STACKED WITH THE OPENINGS ON THE TOP AND BOTTOM EXCEPT FOR THE CENTER BLOCKS. CENTER BLOCKS WILL HAVE OPENINGS PERPENDICULAR TO FLOW.
2. FILTER FABRIC SHALL HAVE AN EOS OF 40-85
3. WOODEN FRAME SHALL BE CONSTRUCTED OF 2"x4" CONSTRUCTION GRADE LUMBER.
4. WIRE MESH ACROSS THROAT SHALL BE A CONTINUOUS PIECE 30 INCH MINIMUM WIDTH WITH A LENGTH 4 FEET LONGER THAN THE THROAT. IT SHALL BE SHAPED AND SECURELY NAILED TO A 2" X 4" WEIR.
5. THE WEIR SHALL BE SECURELY NAILED TO 2"x4" SPACERS 9 INCHES LONG SPACED NO MORE THAN 6 FEET APART.
6. THE ASSEMBLY SHALL BE PLACED AGAINST THE INLET AND SECURED BY 2" X 4" ANCHORS 2 FEET LONG EXTENDING ACROSS THE TOP OF THE INLET AND HELD IN PLACE BY SANDBAGS OR ALTERNATE WEIGHTS.
7. MAXIMUM DRAINAGE AREA IS 1 ACRE.

INLET PROTECTION BARRIER DETAIL
NOT TO SCALE

SILT FENCE
NOT TO SCALE

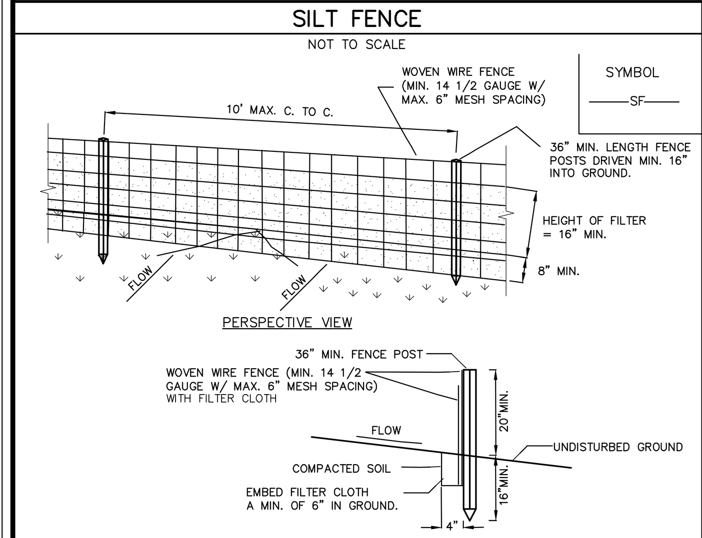

CONSTRUCTION SPECIFICATIONS

1. WOVEN WIRE FENCE TO BE FASTENED SECURELY TO FENCE POSTS WITH WIRE TIES OR STAPLES. POSTS SHALL BE STEEL EITHER "T" OR "U" TYPE OR HARDWOOD.
2. FILTER CLOTH TO BE TO BE FASTENED SECURELY TO WOVEN WIRE FENCE WITH TIES SPACED EVERY 24" AT TOP AND MID SECTION. FENCE SHALL BE WOVEN WIRE, 12 1/2 GAUGE, 6" MAXIMUM MESH OPENING.
3. WHEN TWO SECTIONS OF FILTER CLOTH ADJOIN EACH OTHER THEY SHALL BE OVER-LAPPED BY SIX INCHES AND FOLDED. FILTER CLOTH SHALL BE EITHER FILTER X, MIRAFI 100X, STABILINKA T140N, OR APPROVED EQUIVALENT.
4. PREFABRICATED UNITS SHALL BE GEOFAB, ENVIROFENCE, OR APPROVED EQUIVALENT.
5. MAINTENANCE SHALL BE PERFORMED AS NEEDED AND MATERIAL REMOVED WHEN "BULGES" DEVELOP IN THE SILT FENCE.

SOIL STOCKPILE DETAIL
NOT TO SCALE

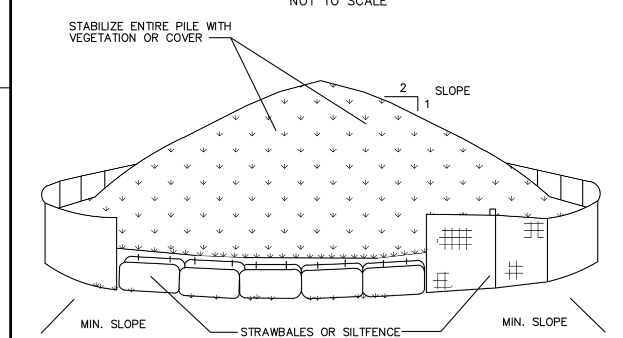

INSTALLATION NOTES
1. AREA CHOSEN FOR STOCKPILING OPERATIONS SHALL BE DRY AND STABLE.
2. MAXIMUM SLOPE OF STOCKPILE SHALL BE 1:2.
3. UPON COMPLETION OF SOIL STOCKPILING, EACH PILE SHALL BE SURROUNDED WITH EITHER SILT FENCING OR STRAWBALES, THEN STABILIZED WITH VEGETATION OR COVERED.
4. SEE SILT FENCE DETAIL FOR INSTALLATION OF SILTFENCE.

TIMING
TOPSOIL SHOULD NOT BE STRIPPED, STOCKPILED, OR REPLACED UNTIL APPROPRIATE SEDIMENT CONTROL DEVICES ARE IN PLACE. TOPSOILING SHOULD NOT OCCUR DURING WINTER MONTHS. SOILS SHOULD NOT BE STRIPPED OR STOCKPILED UNLESS CONSTRUCTION IS SCHEDULED WITHIN THE SAME BUILDING SEASON.

MAINTENANCE
PERIMETER SEDIMENT CONTROLS MUST BE MAINTAINED ACCORDING TO THE STANDARDS DESCRIBED IN THIS MANUAL. STOCKPILES AND FILL AREAS SHALL BE INSPECTED PERIODICALLY (I.E. WEEKLY) FOR SIGNS OF EROSION OR PROBLEMS WITH PLANT ESTABLISHMENT.

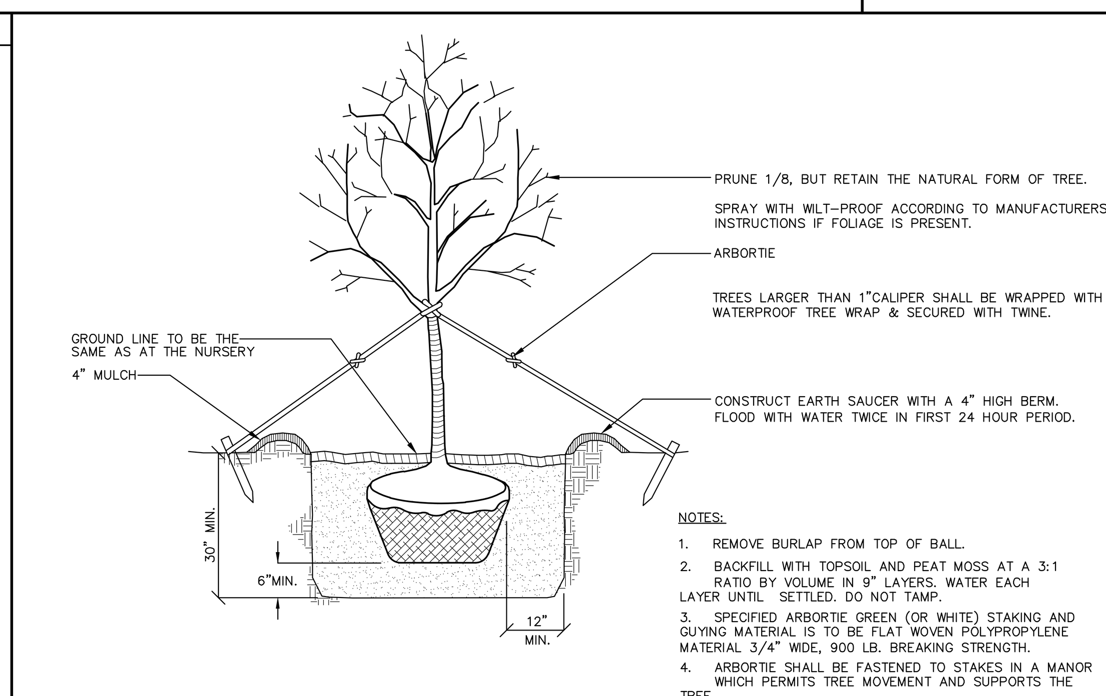

NOTES:
1. REMOVE BURLAP FROM TOP OF BALL.
2. BACKFILL WITH TOPSOIL AND PEAT MOSS AT A 3:1 RATIO BY VOLUME IN 9" LAYERS. WATER EACH LAYER UNTIL SETTLED. DO NOT TAMP.
3. SPECIFIED ARBORTIE GREEN (OR WHITE) STAKING AND GUYING MATERIAL IS TO BE FLAT WOVEN POLYPROPYLENE MATERIAL 3/4" WIDE, 900 LB. BREAKING STRENGTH.
4. ARBORTIE SHALL BE FASTENED TO STAKES IN A MANOR WHICH PERMITS TREE MOVEMENT AND SUPPORTS THE TREE.

PL-001 PLANTING & ARBOR TIE KNOT GUYING DETAIL
NOT TO SCALE

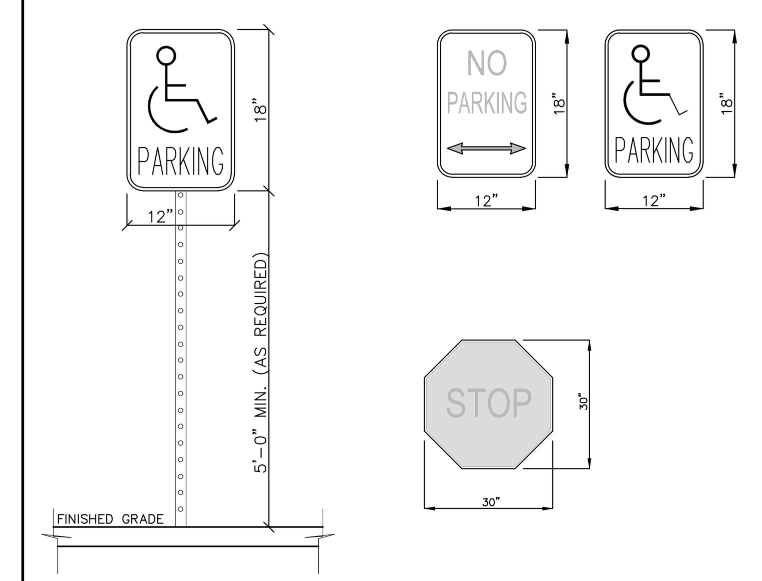

SIGNAGE DETAILS
(NOT TO SCALE)

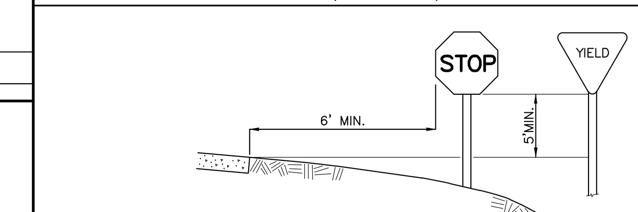

TYPICAL SIGN LOCATION
(NOT TO SCALE)

STABILIZED CONSTRUCTION ENTRANCE

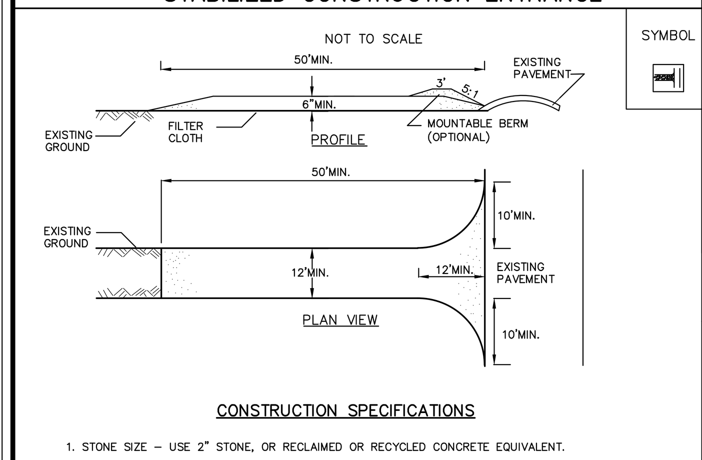

CONSTRUCTION SPECIFICATIONS

1. STONE SIZE – USE 2" STONE, OR RECLAIMED OR RECYCLED CONCRETE EQUIVALENT.
2. LENGTH – NOT LESS THAN 50 FEET (EXCEPT ON A SINGLE RESIDENCE LOT WHERE A 30 FOOT MINIMUM LENGTH WOULD APPLY).
3. THICKNESS – NOT LESS THAN SIX (6) INCHES.
4. WIDTH – TWELVE (12) FOOT MINIMUM, BUT NOT LESS THAN THE FULL WIDTH AT POINTS WHERE INGRESS OR EGRESS OCCURS. TWENTY-FOUR (24) FOOT IF SINGLE ENTRANCE TO SITE.
5. FILTER CLOTH – WILL BE PLACED OVER THE ENTIRE AREA PRIOR TO PLACING OF STONE.
6. SURFACE WATER – ALL SURFACE WATER FLOWING OR DIVERTED TOWARD CONSTRUCTION ENTRANCES SHALL BE PIPED ACROSS THE ENTRANCE. IF PIPING IS IMPRACTICAL, A MOUNTABLE BERM WITH 5:1 SLOPES WILL BE PERMITTED.
7. MAINTENANCE – THE ENTRANCE SHALL BE MAINTAINED IN A CONDITION WHICH WILL PREVENT TRACKING OR FLOWING OF SEDIMENT ONTO PUBLIC RIGHTS-OF-WAY, ALL SEDIMENT SPILLED, DROPPED, WASHED OR TRACTED ONTO PUBLIC RIGHTS-OF-WAY MUST BE REMOVED IMMEDIATELY.
8. WHEN WASHING IS REQUIRED, IT SHALL BE DONE ON AN AREA STABILIZED WITH STONE AND WHICH DRAINS INTO AN APPROVED SEDIMENT TRAPPING DEVICE.
9. PERIODIC INSPECTION AND NEEDED MAINTENANCE SHALL BE PROVIDED AFTER EACH RAIN.

TEMPORARY WOODEN TREE GUARD DETAIL
NOT TO SCALE

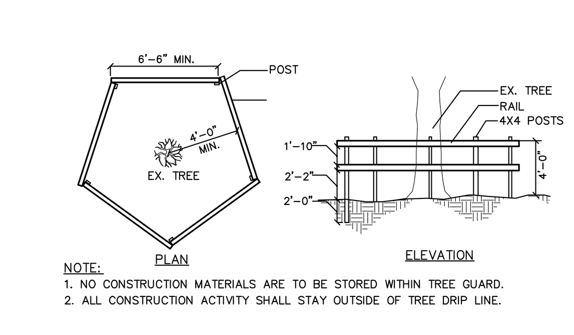

NOTE:
1. NO CONSTRUCTION MATERIALS ARE TO BE STORED WITHIN TREE GUARD.
2. ALL CONSTRUCTION ACTIVITY SHALL STAY OUTSIDE OF TREE DRIP LINE.

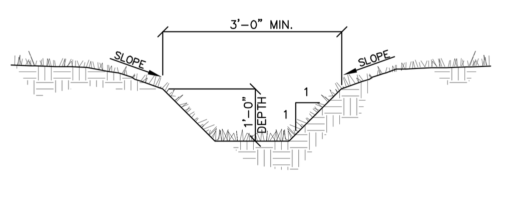

DR-055 GRASS SWALE DETAIL
NOT TO SCALE

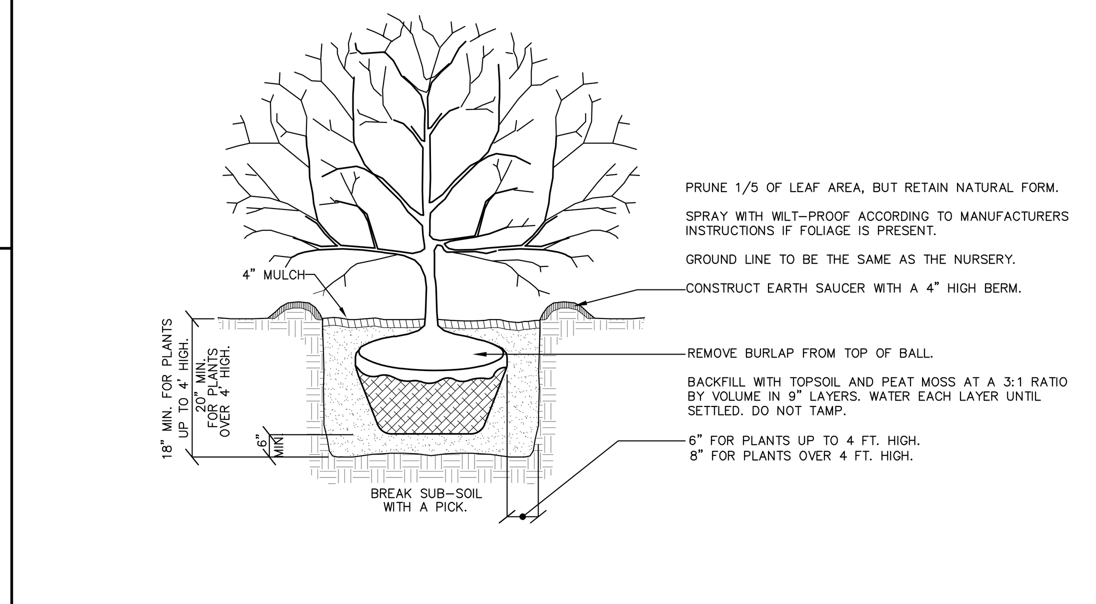

PL-005 SHRUB PLANTING DETAIL FOR ALL SHRUBS BALLED & BURLAPPED
NOT TO SCALE

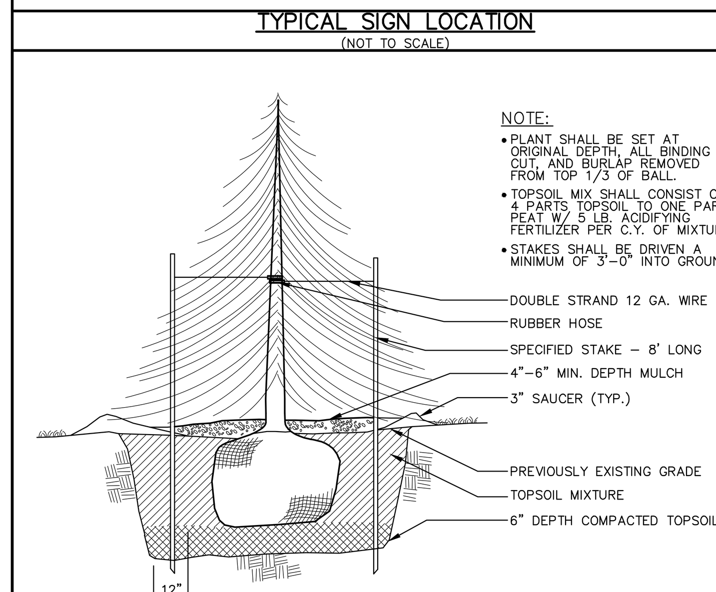

PL-003 EVERGREEN PLANTING DETAIL
NOT TO SCALE

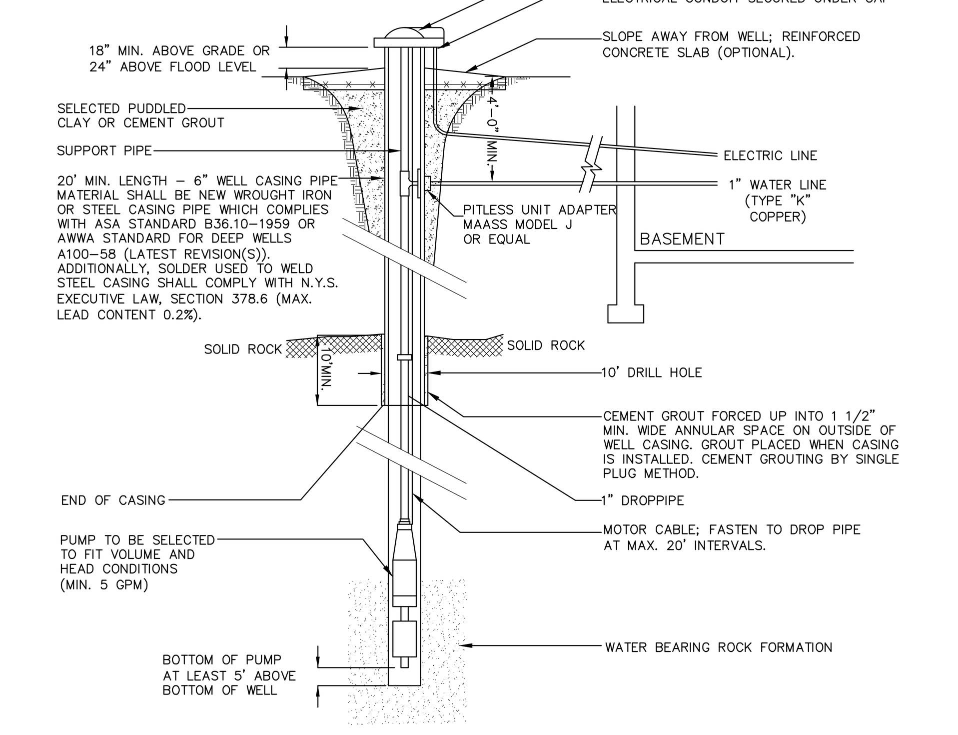

WA-018 WELL DETAIL
NOT TO SCALE

LOCATION MAP SCALE 1 IN. = 2000 FT.

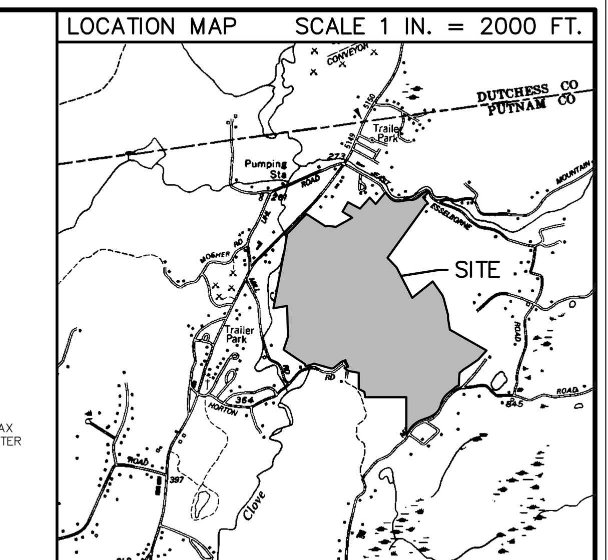

VICINITY MAP SCALE 1 IN. = 800 FT.

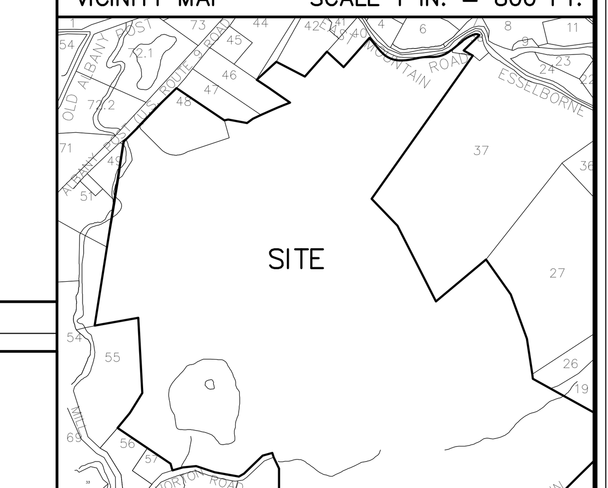

SITE DATA

TAX MAP NUMBER

SECTION:	17	17	17	17	17	17
BLOCK:	1	1	1	1	1	1
LOT:	39	48	76.111	76.112	76.21	77.2

REVISIONS

DATE	REVISION	DESCRIPTION
See Title	R01	Original Drawing
04/15/2021	R16	FEIS RESPONSES
03/03/2022	R19	FEIS RESPONSES

UNDERGROUND WARNING – NYS CODE RULE 753

NEW YORK STATE INDUSTRIAL CODE 53 REQUIRES EXCAVATORS TO CALL DIG SAFELY NEW YORK, INC. (800-962-7962) FOR A MEMBER-UTILITY LOCATION REQUEST AT LEAST TWO (2) WORKING DAYS, BUT NOT MORE THAN TEN (10) WORKING DAYS BEFORE ANY EXCAVATION OR DEMOLITION STARTS, REGARDLESS OF LOCATION. NOT ALL UTILITIES AND MUNICIPALITIES ARE MEMBERS OF DIG SAFELY NEW YORK, INC., AND NON-MEMBER UTILITY OPERATORS MUST BE CONTACTED DIRECTLY.

WARNING STAMP

ALTERATION OF THIS DOCUMENT, IN ANY WAY, BY ANY PERSON NOT UNDER THE DIRECTION OF A LICENSED PROFESSIONAL ENGINEER OR LAND SURVEYOR, AS APPROPRIATE, IS A VIOLATION OF THE EDUCATION LAW OF THE STATE OF NEW YORK

PROJECT LOCATION
ROUTE 9, HORTON ROAD, E MT ROAD N
TOWN OF PHILIPSTOWN
COUNTY OF PUTNAM
STATE OF NEW YORK

PROPERTY OWNER
HORTON ROAD LLC
315 EAST 91ST STREET UNIT 2S
NEW YORK, NY 10128

APPLICANT
HORTON ROAD LLC
315 EAST 91ST STREET UNIT 2S
NEW YORK, NY 10128

PROJECT DESCRIPTION
24 LOT CONSERVATION SUB-DIVISION.

PLAN SET
PREPARED FOR
HUDSON HIGHLANDS RESERVE
PRELIMINARY PLAN OF NOTES AND DETAILS

SCALE : AS SHOWN

PRELIMINARY
LICENSE No. 103021

PRINTED
February 28, 2022
BADEY & WATSON
Surveying & Engineering, D.P.C.

COPYRIGHT 2022 BY BADEY & WATSON, SURVEYING & ENGINEERING, D.P.C.

BADEY & WATSON
Surveying & Engineering, D.P.C.
3063 Route 9
Cold Spring, NY 10516
www.Badey-Watson.com
845.265.9217
877.3.141593 (Toll Free)

FILE No. 20-154